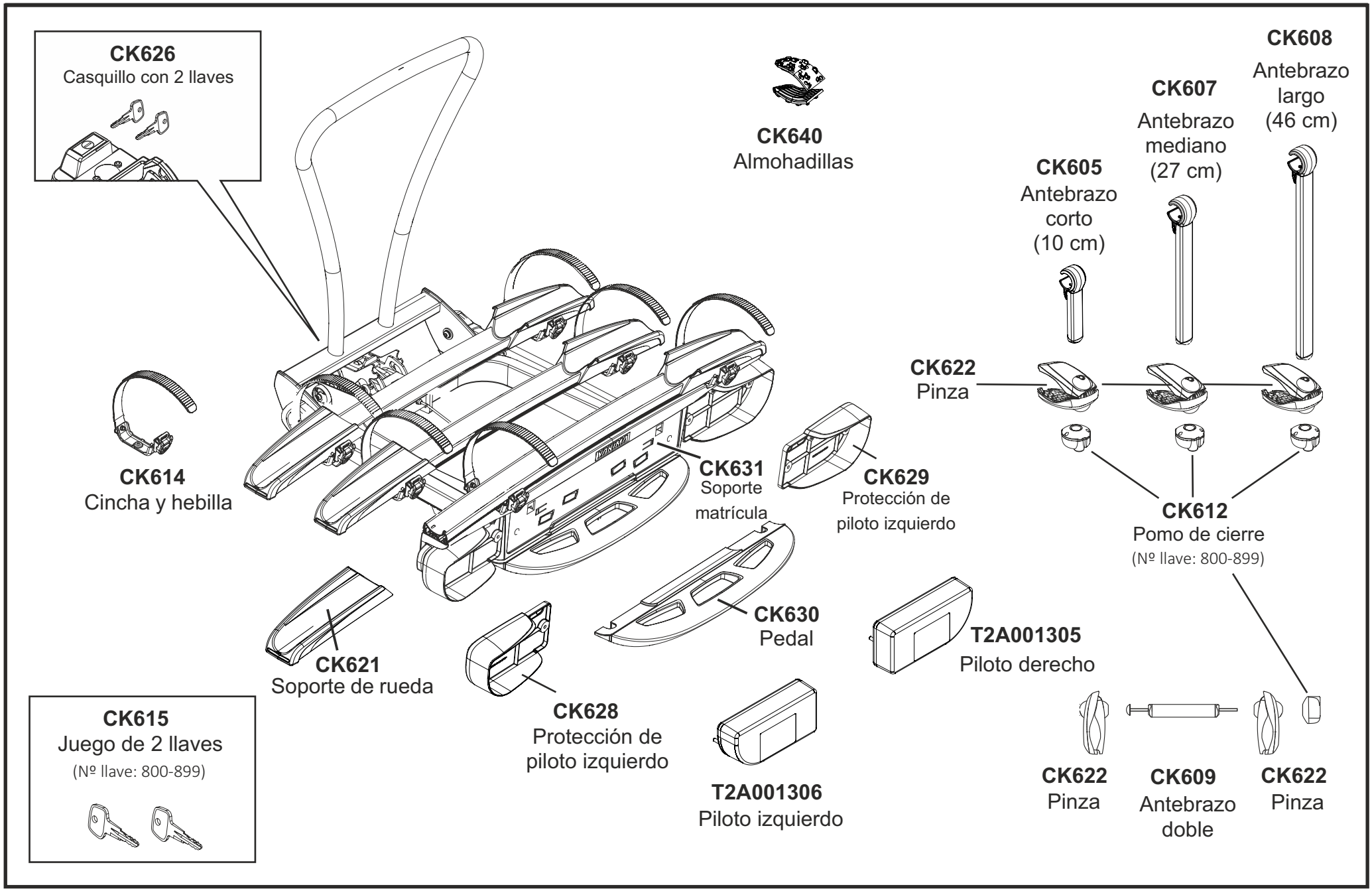Recambios JustClick 3 (8002487)