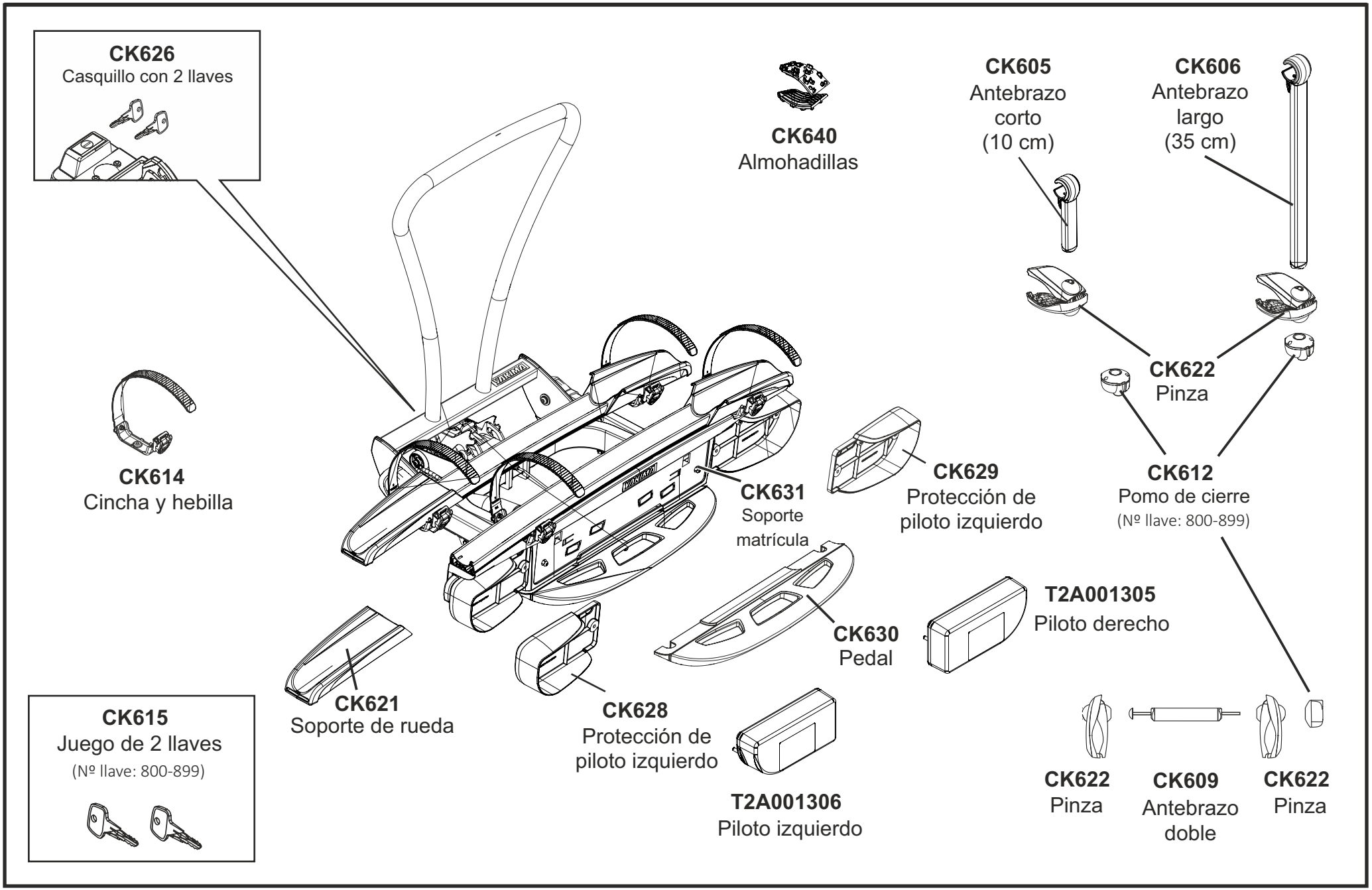Recambios JustClick 2 (8002486)